KINO-DQM871-i1

Mini-ITX SBC supports 4th generation 22nm Intel® mobile processors, HDMI/ VGA/LVDS/DP, dual Intel® PCIe GbE, USB 3.0, SATA 6Gb/s, iRIS-1010, audio and RoHS

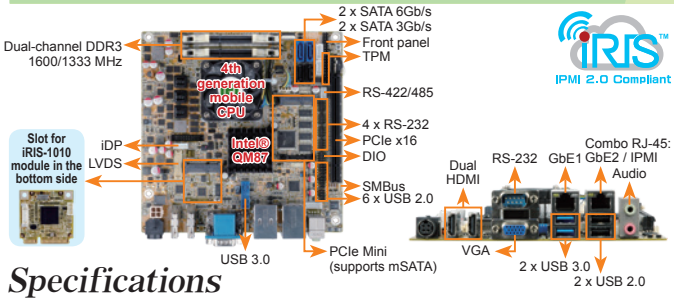

Specifications

- CPU
  Intel® mobile Core™ i7-4700EQ on-board processor with Intel® AMT 9.0 support (2.4GHz, quad-core, 6MB cache, TDP=47W)
  Intel® mobile Core™ i5-4402E on-board processor with Intel® AMT 9.0 support (1.6GHz, dual-core, 3MB cache, TDP=25W)
  Intel® mobile Core™ i3-4102E on-board processor (1.6GHz, dual-core, 3MB cache, TDP=25W)
  Intel® mobile Celeron® 2002E on-board processor (1.5GHz, dual-core, 2MB cache, TDP=25W)
  Intel® mobile Core™ i5-4400E on-board processor with Intel® AMT 9.0 support (2.7GHz, dual-core, 3MB cache, TDP=37W) (by request)
  Intel® mobile Core™ i3-4100E on-board processor (2.4GHz, dual-core, 3MB cache, TDP=37W) (by request)
  Intel® mobile Celeron® 2000E on-board processor (2.2GHz, dual-core, 2MB cache, TDP=37W) (by request)
- Chipset: Intel® QM87
- Memory: Two 204-pin 1600/1333 MHz dual-channel DDR3 SDRAM unbuffered DIMMs support up to 16 GB
- BIOS: UEFI BIOS
- Ethernet
  LAN1: Intel® I217LM with Intel® AMT 9.0 support
  LAN2: Intel® I210-AT PCIe controller
- Graphics Engine
  Intel® HD Graphics Gen 7.5 supports DX11.1 and OpenCL 1.2, OpenGL 3.2
  Full MPEG2, VC1, AVC Decode
- Audio
  Realtek ALC662 HD codec supports 5.1-channel
  2 x Audio jacks (line-out, mic-in) on rear IO
- iRIS Remote Management Module
  1 x iRIS-1010 slot
- LAN LED: 2 x LAN LED (1x2 pin)
- Display Output
  1 x VGA (up to 1920x1200@60Hz)
  1 x 18/24-bit dual-channel LVDS (up to 1920x1200@60Hz)
  2 x HDMI (up to 2500x1600@60Hz)
  1 x iDP interface for HDMI, LVDS, VGA, DVI, DP (up to 3840x2160@60Hz)
- External I/O Interface
  1 x RS-232 2 x USB 2.0 2 x USB 3.0
- Internal I/O Interface
  1 x KB/MS (1x6 pin)
  1 x RS-422/485 (1x4 pin, P=2.0)
  2 x SATA 3Gb/s
  2 x SATA 6Gb/s (RAID 0/1/5/10 supported)
  2 x USB 3.0 (2x10 pin, P=2.0)
  4 x RS-232 (2x5 pin, P=2.0)
  6 x USB 2.0 (2x4 pin, P=2.54)
- Front Panel: 1 x Front panel (2x7 pin, power LED, HDD LED, speaker, power button, reset button)
- SMBus: 1 x SMBus (1x4 pin)
- TPM: 1 x TPM (2x10 pin)
- Expansion: 1 x PCIe x16 slot
  1 x Full-size PCIe Mini card slot (support mSATA)
- Watchdog Timer: Software programmable, support 1~255 sec. system reset
- Digital I/O: 8-bit digital I/O (2x5 pin)
- Fan Connector: 1 x CPU smart fan (1x4 pin)
  1 x System smart fan (1x4 pin)
- Power Supply: 12V DC input
  1 x Internal power connector (2x2 pin)
  1 x External DC jack (4-pin DIN)
  Support AT/ATX mode
- Power Consumption: 12V@6.03A (Intel® Core™ i7-4770EQ, 2.4GHz CPU with 8 GB (two 4 GB) 1333 MHz DDR3 memory)
- Operating Temperature: -20°C ~ 60°C
- Operating Humidity: 5% ~ 95%, non-condensing
- Dimensions: 170mm x 170mm
- Weight: GW: 900g / NW: 450g
- CE/FCC compliant

Packing List

1 x KINO-DQM871-i1 motherboard	
1 x CPU cooler	1 x Mini jumper pack
1 x I/O shielding	1 x QIG
2 x SATA with power output cable	1 x Utility CD

Ordering Information

Part No.	Description
KINO-DQM871-i1-i7-R10	Mini-ITX SBC supports Intel® 22nm mobile Core™ i7-4700EQ on-board processor, HDMI / VGA / LVDS / DP, dual Intel® PCIe GbE, AMT 9.0, USB 3.0, SATA 6Gb/s, iRIS-1010, audio and RoHS
KINO-DQM871-i1-i5E-R10	Mini-ITX SBC supports Intel® 22nm mobile Core™ i5-4402E on-board processor, HDMI / VGA / LVDS / DP, dual Intel® PCIe GbE, AMT 9.0, USB 3.0, SATA 6Gb/s, iRIS-1010, audio and RoHS
KINO-DQM871-i1-i3E-R10	Mini-ITX SBC supports Intel® 22nm mobile Core™ i3-4102E on-board processor, HDMI / VGA / LVDS / DP, dual Intel® PCIe GbE, USB 3.0, SATA 6Gb/s, iRIS-1010, audio and RoHS
KINO-DQM871-i1-CE-R10	Mini-ITX SBC supports Intel® 22nm Celeron® 2002E on-board processor, HDMI / VGA / LVDS / DP, dual Intel® PCIe GbE, USB 3.0, SATA 6Gb/s, iRIS-1010, audio and RoHS
iRIS-1010-R10	IPMI 2.0 adapter card with AST1010 BMC chip (W/O KVM over IP function) for PCIe Mini socket interface
19800-000300-100-RS	RS-232 cable with bracket, 300mm, P=2.0
19800-003100-100-RS	Dual port USB 2.0 cable with bracket, 300mm, P=2.54
19800-010500-200-RS	USB 3.0 cable with bracket, 450mm
32000-023800-RS	PS/2 KB/MS cable, 135mm/110mm, P=2.0
32205-003800-200-RS	RS-422/485 cable, 200mm, P=2.0
DP-DP-R10	DisplayPort converter board (for IEI iDP connector)
DP-DVI-R10	DisplayPort to DVI-D converter board (for IEI iDP connector)
DP-HDMI-R10	DisplayPort to HDMI converter board (for IEI iDP connector)
DP-LVDS-R10	DisplayPort to 24-bit dual-channel LVDS converter board (for IEI iDP connector)
DP-VGA-R10	DisplayPort to VGA converter board (for IEI iDP connector)
TPM-IN01-R20	20-pin Infineon TPM module, software management tool, firmware v3.17

KINO-QM770

Mini-ITX SBC with Socket G2 for Intel® 22nm mobile CPU, DVI-I, dual HDMI, LVDS, dual PCIe GbE, USB 3.0, PCIe Mini, SATA 6Gb/s and audio

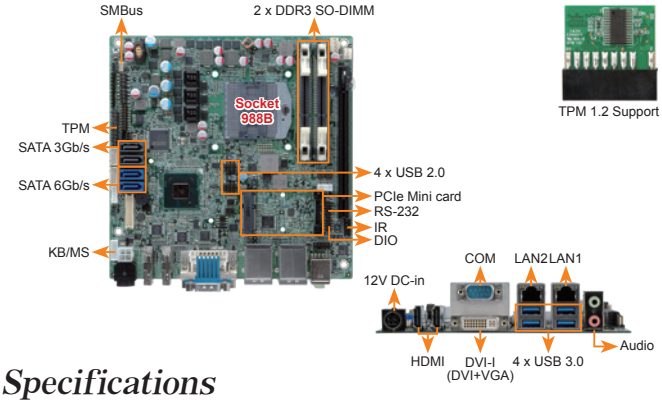

Specifications

- CPU: Socket G2 for 3rd generation Intel® 22nm mobile processor
- Chipset: Intel® QM77
- Memory: Two 240-pin 1600/1333 MHz dual-channel DDR3 SDRAM unbuffered DIMMs support up to 16 GB
- BIOS: UEFI BIOS
- Ethernet
  LAN1:Intel® 82579 PHY with Intel® AMT 8.0 support
  LAN2:Intel® 82583V PCIe controller
- Graphics Engine
  Supports DX11 and OpenGL 3.1
  Full MPEG2, VC1, AVC Decode
- Display Output
  1 x DVI-I (up to 1920x1200@60Hz)
  1 x 18/24-bit dual-channel LVDS (up to 1920x1200@60Hz)
  2 x HDMI (up to 1920x1200@60Hz)
- Audio
  Realtek ALC892 HD codec
  2 x Audio jacks (line-out, mic-in) on rear IO
  1 x Front Audio (2x5 pin)
- SMBus: 1 x SMBus (1x4 pin)
- TPM: 1 x TPM (2x10 pin)
- Expansion
  1 x PCIe x16 slot 1 x PCIe Mini card slot
- Digital I/O: 8-bit digital I/O (2x5 pin)
- External I/O Interface
  1 x RS-232 4 x USB 3.0
- Internal I/O Interface
  1 x KB/MS (1x6 pin)
  2 x SATA 3Gb/s
  1 x RS-232 (2x5 pin, P=2.0)
  2 x SATA 6Gb/s (RAID 0/1/5/10 supported)
  1 x RS-422/485 (1x4 pin, P=2.0)
  4 x USB 2.0 (2x4 pin, P=2.54)
- Watchdog Timer: Software programmable supports 1~255 sec. system reset
- Infrared Interface: 1 x Infrared interface (1x5 pin)
- Fan Connector
  1 x CPU smart fan (1x4 pin)
  1 x System fan (1x3 pin)
- Power Supply
  12V DC input
  1 x Internal power connector (2x2 pin)
  1 x External DC jack (4-pin DIN)
  Support AT/ATX mode
- Power Consumption
  12V@6.08A (2.3GHz Intel® Core™ i7-3610QE with two 1333 MHz 4 GB DDR3 memory running 3DMark06 burn in)
- Operating Temperature: -10°C ~ 60°C
- Storage Temperature: -20°C ~ 70°C
- Operating Humidity: 5% ~ 95%, non-condensing
- Dimensions: 170 mm x 170 mm
- Weight: GW: 900g / NW: 450g
- CE/FCC compliant

Dimensions *(Unit: mm)*

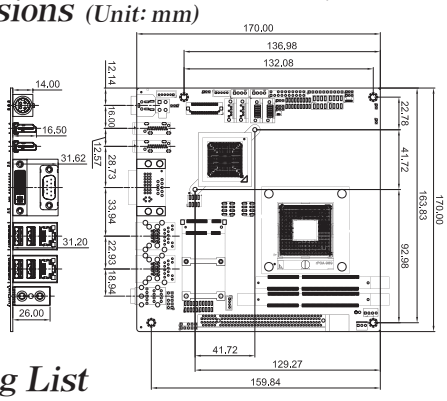

Packing List

1 x KINO-QM770 single board computer	1 x Mini jumper pack
1 x I/O shielding	1 x One Key Recovery CD
1 x RS-232 cable with bracket	1 x QIG
2 x SATA with power output cable	1 x Utility CD

Ordering Information

Part No.	Description
KINO-QM770-R10	Mini-ITX SBC with Socket G2 for Intel® 22nm mobile CPU, DVI-I/dual HDMI/LVDS, dual PCIe GbE, USB 3.0, PCIe Mini, SATA 6Gb/s and Audio
19800-003100-100-RS	Dual port USB 2.0 cable with bracket, 300mm, P=2.54
32000-023800-RS	PS/2 KB/MS cable, 135mm/110mm, P=2.0
32205-003800-300-RS	RS-422/485 cable, 200mm, P=2.0
33Z00-000031-RS	DVI-I to VGA adapter connector
CF-989A-RS-R12	CPU cooler for mobile socket-G (PGA988) up to 55W processor, copper, 60 x 60 x 27.6mm, RoHS
SACF-KIT01-R10	SATA to CF converter board
TPM-IN01-R20	20-pin Infineon TPM module, software management tool, firmware v3.17

Contradata Milano S.r.l. - Via Solferino 12, 20900 Monza (MB) - Email: info@contradata.it - Phone: (+39) 039-230.14.92